卷册检索号 SEARCH NO. OF THE VOLUME
MLHVDC-ENG-CSI-DD-EC-0101 49-B60011S-D0211

第 1 页 PAGE 共 1 页 OF

图纸文件目录（首页）

CATALOG OF DRAWING DOCUMENTS (HEAD PAGE)

拉合尔±660kV换流站 工程 施工图 阶段
±660kV Lahore Converter Station PROJECT Detail Design DESIGN STAGE

电气 专业 第 02 卷 第 11 册
Electrical SPECIALITY VOLUME 02 BOOK 11

卷册名称 500kV站用变压器回路接线及平、断面布置图
Volume name The wiring, plane and sectional drawing of 500kV station transformer circuit

批 准 APPROVED BY	张伟
审 核 REVIEWED BY	田俊强
设计/勘测 DESIGNED BY/ SURVEYED BY	王[illegible]
图纸 5 张 DRAWING NOS.	打印件 0 本 PRINTED COPIES NOS.

序号 No.	图 号 DRAWING NO.	文件名称 DOCUMENT TITLE	版本 EDITION	张 NOS.	本 NOS.	备注 REMARKS
1	B60011S-D0211-001	卷册说明 Description of drawing	A	1		
2	B60011S-D0211-002	500/35kV降压变压器配置接线图 Configuration wiring drawing of 500/35kV station transformer	A	1		
3	B60011S-D0211-003	500/35kV降压变压器平面布置图 Layout drawing of 500/35kV station transformer	A	1		
4	B60011S-D0211-004	500/35kV降压变压器断面布置图 The sectional drawing of 500/35kV station transformer	A	1		
5	B60011S-D0211-005	材料汇总表 Material summarization sheet	A	1		

注:

卷册说明

Description of drawing

1. 本卷册为换流站500/35kV站用变压器布置、接线及断面图，包括#1及#2站用变压器。
2. 主变500kV侧采用 2×LGKK-600 扩径空芯铝合金导线，分裂间距为400mm；35kV侧采用 2×JNRLH1/G1A-1440/120 型耐热铝合金钢芯导线，分裂间距为200mm。
3. 高压套管端子与导线的连接金具在本分册开列，连接导线、间隔棒以及导线与避雷器端子的连接金具开列在B60011S-D0201分册。
4. 低压套管端子与导线的连接金具及连接导线、间隔棒在本分册开列，导线与35kV母线的连接金具开列在B60011S-D0209分册。
5. 双根软导线间的间隔棒设置原则如下：与设备端子相连的引下线和各设备端子之间的连接导线间隔棒间隔为1m。
6. 土建施工设备基础时，电气安装人员应密切配合，设备组装方式及安装调试应按制造厂家要求进行。
7. 施工过程中务必保持图中所注各部分电气距离的要求，满足电力行业标准"高压配电装置设计技术规程《DL/T5352-2006》"和 IEC国际标准"IEC_61936-1_Ed2.1-2014"中的规定值。
8. 本卷册为电气B包施工范围,本卷册中所有金具、导线、设备均为甲供。
9. 本卷册金具参照辽宁锦兴电力金具科技股份有限公司产品样本选择。金具的界限板尺寸按axb（长x宽）开列，见下图。

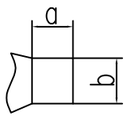

1. This volume is the layout, wiring and section of the 500/35kV station transformer for the converter station, including the #1 and #2 station transformers.
2. 500kV side for the transformer adopts 2×LGKK-600 expanded diameter hollow core aluminum alloy wire, intrabundle spacing is 400mm; the 35kV side adopts 2×JNRLH1/G1A-1440/120 heat-resistant aluminum alloy steel core wire, intrabundle spacing is 200mm.
3. The connection fittings of the high-voltage bushing terminals and the wire are listed in this volume. The connecting wire, the spacer bars, and the connecting fittings of the wire and the arrester terminals are listed in volume B60011S-D0201.
4. The connection fittings of the low-voltage bushing terminals and the wire, the connecting wire and the spacers are listed in this volume, and the connecting fittings of the wire and the 35kV bus bar are listed in volume B60011S-D0209.
5. The principle of setting the spacers between the double flexible wires is as follow: The spacing of the 35kV equipment connecting spacers is one meter.
6. When civil constructing the foundation of equipment, electrical contractor should work closely with, and should check whether the actual delivery equipment is consistent with the design drawings. The assembly, installation and commissioning of equipment should be carried out according to the requirements of the manufacturer.
7. During the construction, it is necessary to keep the requirements of the electrical distance of each part indicated in the figure and meet the stipulated values in the power industry standard "Technical code for designing high-voltage electrical switchgear *DL/ T5352-2006*" and IEC international standard "*IEC_61936-1_Ed2.1-2014*".
8. The construction of this volume is in the charge of electrical contractor B. The materials listed in this volume are supplied by contractor.
9. The fittings in this volume are listed referred to the product samples of Liaoning Jinxing Electric Fitting Science & Technology Co., Ltd. The size of the terminal board is axb (length x width), as shown in the following figure.

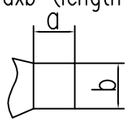

巴基斯坦默蒂亚里—拉合尔±660kV直流输电工程

±660kV HVDC Project from Matiari to Lahore in Pakistan

NATIONAL TRANSMISSION & DESPATCH COMPANY (NTDC) LIMITED PAKISTAN

CONTRACTOR 国家电网 STATE GRID 中国电力技术装备有限公司 CHINA ELECTRIC POWER EQUIPMENT AND TECHNOLOGY CO.,LTD.

拉合尔±660kV换流站

±660kV Lahore Converter Station

设计阶段 PHASE: 施工图 Detail Design

M L H V D C - E N G - C S I - D D - E C - 0 2 1 1 - 0 0 1 A

	姓名 Name	日期 Date	
设计 Designed	王[illegible]	2019.03.22	卷册说明 Description of drawing
校核 Checked	[illegible]	2019.03.22	
审核 Reviewed	田[illegible]	2019.03.22	
批准 Approved	[illegible]	2019.03.22	
比例 Scale		图号 DWG NO.	B60011S-D0211-001

版本 REV. A

户外油浸式，双绕组
型式：SFZ-130000/500
相数：三相
额定电压：(510±4×2.5%)/35kV
额定容量： 130MVA
调压方式：无励磁调压
冷却方式：ONAN/ONAF
阻抗电压(%)：12
接线组别：YNd11
高压侧套管：
TPY：500-1000/1 A; 10VA
高压侧中性点套管：
5P30：200/1 A, 20VA
低压侧套管：
5P20: 2x1250/1A. 20VA
0.2S: 2x1250/1A. 20VA
0.5S: 2x1250/1A. 20VA
TPY: 2x1250/1A. 10VA

oil-immersed, outdoor, duplex winding
type：SFZ-130000/500
number of phase：three-phase
rated voltage：(510±4×2.5%)/35kV
rated power： 130MVA
voltage regulating mode：
non-excitation voltage regulation
type of cooling ：ONAN/ONAF
impedance voltage(%)：12
connection symbol：YNd11
high Voltage Side Bushing of Transformer：
TPY：500-1000/1 A; 10VA
neutral bushing of Transformer：
5P30：200/1 A, 20VA
low Voltage Side Bushing of Transformer：
5P20: 2x1250/1A. 20VA
0.2S: 2x1250/1A. 20VA
0.5S: 2x1250/1A. 20VA
TPY: 2x1250/1A. 10VA

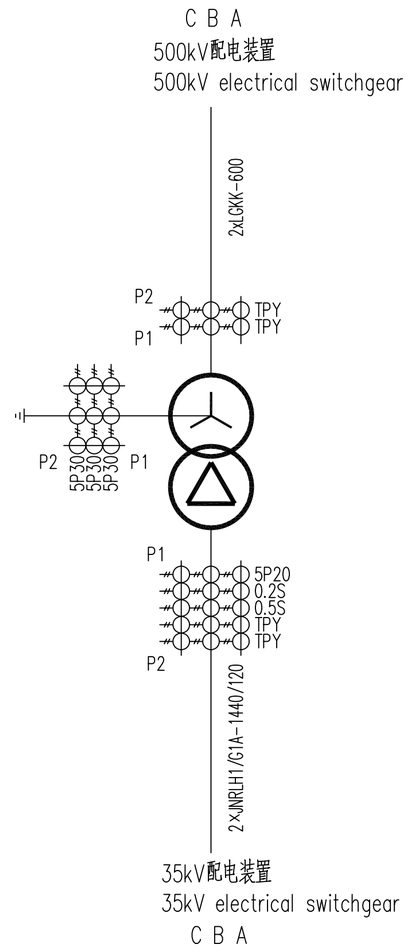

说明:
500kV站用变压器本期建设2台，远景2台，参数一致。

Notes:
2 sets of 500kV substation transformers, which have the same parameters, are constructed for both current and future period.

专业 Speciality	会签 Sign	日期 Date

巴基斯坦默蒂亚里—拉合尔±660kV直流输电工程
±660kV HVDC Project from Matiari to Lahore in Pakistan

NATIONAL TRANSMISSION & DESPATCH COMPANY (NTDC) LIMITED PAKISTAN

CONTRACTOR 国家电网 STATE GRID
中国电力技术装备有限公司 CHINA ELECTRIC POWER EQUIPMENT AND TECHNOLOGY CO.,LTD.

拉合尔±660kV换流站
±660kV Lahore Converter Station

设计阶段 PHASE: 施工图 Detail Design

M L H V D C - E N G - C S I - D D - E C - 0 2 1 1 - 0 0 2 A

	姓名 Name	日期 Date
设计 Designed	王赫	2019.03.22
校核 Checked	李远	2019.03.22
审核 Reviewed	田俊强	2019.03.22
批准 Approved		2019.03.22

500/35kV站用变压器配置接线图
Configuration wiring drawing of 500/35kV station transformer

比例 Scale | 图号 DWG NO. B60011S-D0211-002 | 版本 REV. A

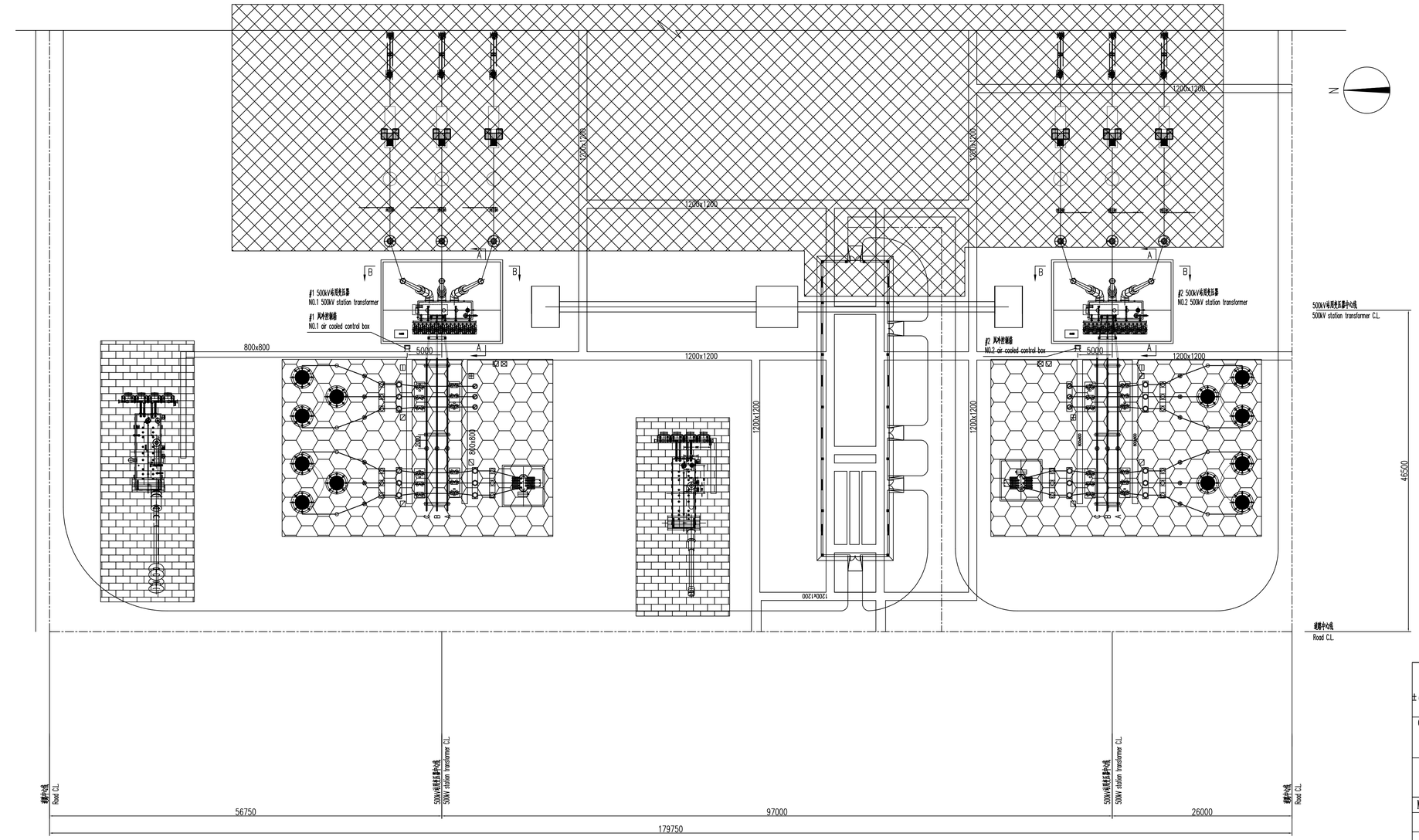

图例

- 风冷控制箱
- 500kV交流配电装置区域，见"49-B60011S-D0201"分册
- 35kV配电装置区域，见"49-B60011S-D0209"分册
- 备用换流变

Legend:

- Air cooling control box
- 500kV electrical switchgear, shown in volume '49-B60011S-D0201'
- 35kV electrical switchgear, shown in volume '49-B60011S-D0209'
- Alternative converter transformer

说明：

1. 图中尺寸单位为"mm"。
2. 本图仅表示500kV站用变压器区域的内容。
3. A-A 及B-B 断面见图纸B60011S-D0211-004。

Notes:

1. Measurements shown in this drawing are in millimeters.
2. This drawing only shows the layout of 500kV station transformer.
3. For section A-A and B-B, see drawing B60011S-D0211-004.

巴基斯坦默蒂亚里—拉合尔±660kV直流输电工程

±660kV HVDC Project from Matiari to Lahore in Pakistan

NATIONAL TRANSMISSION & DESPATCH COMPANY (NTDC) LIMITED PAKISTAN

CONTRACTOR 国家电网 STATE GRID 中国电力技术装备有限公司 CHINA ELECTRIC POWER EQUIPMENT AND TECHNOLOGY CO.,LTD.

拉合尔±660kV换流站

±660kV Lahore Converter Station

设计阶段 PHASE: 施工图 Detail Design

M L H V D C - E N G - C S I - D D - E C - 0 2 1 1 - 0 0 3 A

	姓名 Name	日期 Date
设计 Designed	王[illegible]	2019.03.22
校核 Checked	[illegible]	2019.03.22
审核 Reviewed	[illegible]	2019.03.22
批准 Approved	[illegible]	2019.03.22
比例 Scale	1:350	图号 DWG NO. B60011S-D0211-003

500/35kV站用变压器平面布置图

Layout drawing of 500/35kV station transformer

版本 REV. A

专业 Speciality	会签 Sign	日期 Date
结构	[illegible]	2019.03

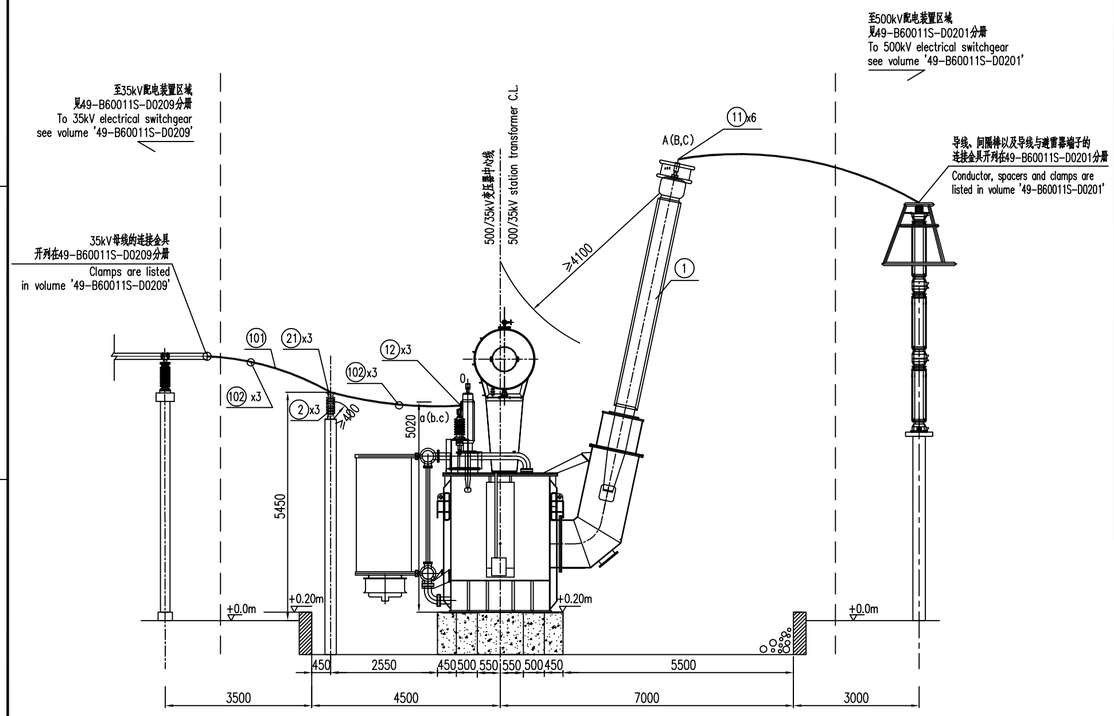

A-A 断面图
A-A Section

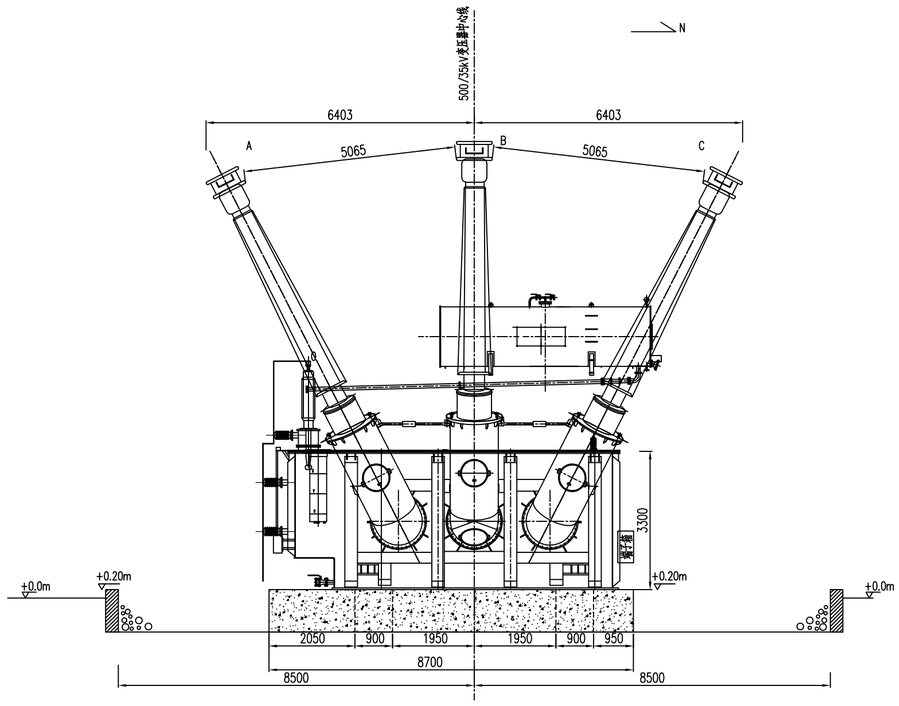

B-B 断面图
B-B Section

电气安装B包材料表 Material bill of electrical contractor B

序号 Item No	名 称 Name	型号及规范 Specification	单位 Unit	数量 Quanity	备 注 Comments
主设备(甲供) Main equipment (Contractor supply)					
1	500kV站用变压器 500kV station transformer	SF-130000/500 (510±4×2.5%)/35kV YNd11	台 Set	2	山东电力设备有限公司 Shandong Electric Power Equipment Co., Ltd.
2	35kV支柱绝缘子 35kV support insulator	40.5kV, 12.5KN	只 Set	6	抚顺电瓷制造有限公司 Fushun Electric Porcelain Manufacturing Co., Ltd.
设备,导线连接金具(甲供) Fittings for the connection of equipment and conductors (Contractor supply)					
11	0°单导线铜铝过渡设备线夹 Zero-angle AL-Cu terminal connectors for single conductor	SYG-600KA(130×110)	套 Pcs	12	高压套管接线端子用，配合LGKK-600导线，配芯棒 Used for HV Bushing terminal, suitable for LGKK-600
12	90°双导线铜铝过渡设备线夹 Ninety-angle AL-Cu terminal connectors for double conductors	SSYG-1440NC/200 (175×160)	套 Pcs	6	低压套管接线端子用，适用于JNRLH1/G1A-1440/120导线 Used for LV Bushing terminal, suitable for JNRLH1/G1A-1440/120
21	双软导线固定金具 Fittings for double flexible wire supports	MSG-51/200/190(4-ø14)	套 Pcs	6	
导体(甲供) Conductors (Contractor supply)					
101	钢芯铝绞线 Aluminum cable steel reinforced	JNRLH1/G1A-1440/120	米 m	84	单根长度计列 One set in count
102	软导线间隔棒 Spacers for flexible wires	MRJ-51/200	套 Pcs	12	

说明:
1. 图中尺寸单位为mm。
2. 注意厂家到货端子板开孔尺寸，并配合好相应金具开孔。
3. 请施工单位注意在安装变压器35kV侧出线区域的水消防管道及其支柱时，须满足对带电设备净距要求。
4. 设备材料表中按两台变压器及相关设备计列。

Notes:
1. Measurements shown in this drawing are in millimeters.
2. The hole size of fittings should be carefully measured with terminal plate hole size.
3. When installing the water fire protection pipe and its pillars in the 35kV side of the transformer, the requirements for the clearance of the charged equipment must be met.
4. The amount of materials in the material table is counted according to two transformer circuits.

巴基斯坦默蒂亚里—拉合尔±660kV直流输电工程
±660kV HVDC Project from Matiari to Lahore in Pakistan

NATIONAL TRANSMISSION & DESPATCH COMPANY (NTDC) LIMITED PAKISTAN

CONTRACTOR 国家电网 STATE GRID
中国电力技术装备有限公司 CHINA ELECTRIC POWER EQUIPMENT AND TECHNOLOGY CO.,LTD.

拉合尔±660kV换流站
±660kV Lahore Converter Station

设计阶段 PHASE: 施工图 Detail Design

M L H V D C - E N G - C S I - D D - E C - 0 2 1 1 - 0 0 4 A

	姓名 Name	日期 Date
设计 Designed	王赫	2019.03.22
校核 Checked	李迎	2019.03.22
审核 Reviewed	田俊骥	2019.03.22
批准 Approved		2019.03.22
比例 Scale	1:100	图号 DWG NO. B60011S-D0211-004

500/35kV站用变压器断面布置图
The sectional drawing of 500/35kV station transformer

版本 REV. A

结构		2019.03
专业 Speciality	会签 Sign	日期 Date

电气安装B包材料表 Material bill of electrical contractor B

序号 Item No	名 称 Name	型号及规范 Specification	单位 Unit	数量 Quanity	备 注 Comments
主设备(甲供) Main equipment (Contractor supply)					
1	500kV站用变压器 500kV station transformer	SF-130000/500 (510±4×2.5%)/35kV YNd11	台 Set	2	山东电力设备有限公司 Shandong Electric Power Equipment Co., Ltd.
2	35kV支柱绝缘子 35kV support insulator	40.5kV, 12.5KN	只 Set	6	抚顺电瓷制造有限公司 Fushun Electric Porcelain Manufacturing Co., Ltd.
设备,导线连接金具(甲供) Fittings for the connection of equipment and conductors (Contractor supply)					
11	0°单导线铜铝过渡设备线夹 Zero-angle AL-Cu terminal connectors for single conductor	SYG-600KA(130×110)	套 Pcs	12	高压套管接线端子用，配合LGKK-600导线，配芯棒 Used for HV Bushing teminal, suitable for LGKK-600
12	90°双导线铜铝过渡设备线夹 Ninety-angle AL-Cu terminal connectors for double conductors	SSYG-1440NC/200 (175×160)	套 Pcs	6	低压套管接线端子用，适用于JNRLH1/G1A-1440/120导线 Used for LV Bushing teminal, suitable for JNRLH1/G1A-1440/120
21	双软母线固定金具 Fittings for double flexible wire supports	MSG-51/200/190(4-ø14)	套 Pcs	6	
导体(甲供) Conductors (Contractor supply)					
101	钢芯铝绞线 Aluminum cable steel reinforced	JNRLH1/G1A-1440/120	米 m	84	单根长度计列 One set in count
102	软导线间隔棒 Spacers for flexible wires	MRJ-51/200	套 Pcs	12	

巴基斯坦默蒂亚里—拉合尔±660kV直流输电工程

±660kV HVDC Project from Matiari to Lahore in Pakistan

NATIONAL TRANSMISSION & DESPATCH COMPANY (NTDC) LIMITED PAKISTAN

CONTRACTOR 国家电网 STATE GRID 中国电力技术装备有限公司 CHINA ELECTRIC POWER EQUIPMENT AND TECHNOLOGY CO.,LTD.

拉合尔±660kV换流站

±660kV Lahore Converter Station

设计阶段 PHASE: 施工图 Detail Design

M L H V D C - E N G - C S I - D D - E C - 0 2 1 1 - 0 0 5 A

	姓名 Name	日期 Date
设计 Designed	王[illegible]	2019.03.22
校核 Checked	[illegible]	2019.03.22
审核 Reviewed	田[illegible]	2019.03.22
批准 Approved	[illegible]	2019.03.22

材料汇总表

Material summarization sheet

比例 Scale | 图号 DWG NO. B60011S-D0211-005 | 版本 REV. A